Auto-matching & Troubleshooting

Press down the two buttons simultaneously for 5 seconds to start auto-matching

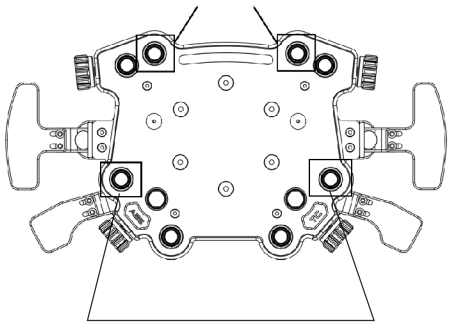

Press down the two buttons simultaneously for 5 seconds to enter Troubleshooting mode. When the mode is on, the lights keep switching to indicate a button or rotary is in working conditions or not.

Clutch Calibration Mode

Push upwards the 7-way position switch for 5 seconds to enter Clutch Calibration Mode

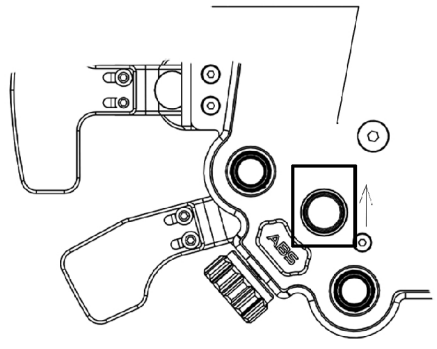

Factory Reset

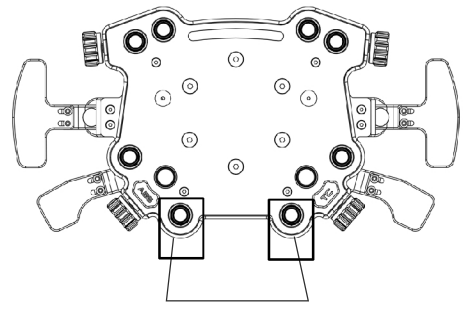

Press down the two buttons simultaneously for 5 seconds to reset to factory settings
(Only for the Hub ontology)

Paddle adjustments

Paddles are adjustable horizontally and vertically

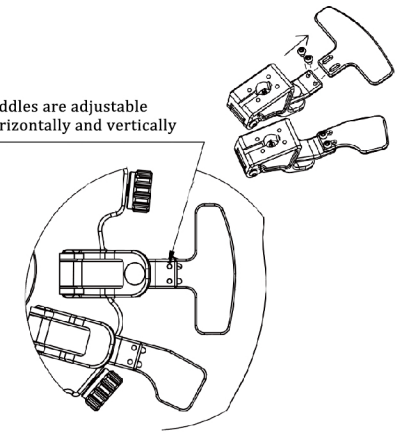

Hub x 1

USB–C X 1

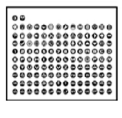

Button Stickers X 1

Connection between Steering Wheels and Wheelbases

The SIMAGIC Quick Release has 6 ball bearings on the upside, with 4 downside

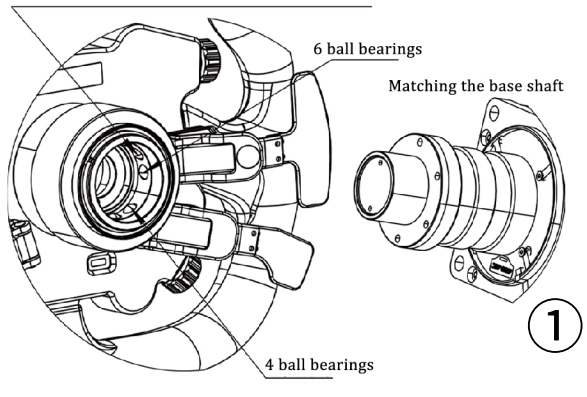

If auto-matching does not work, use an included USB-C cable to connect the steering wheel to the base from backside.

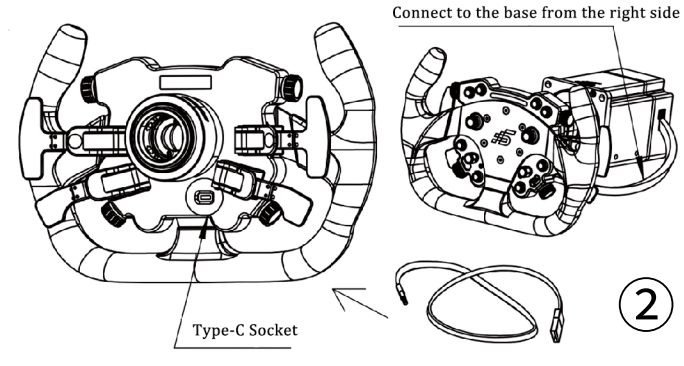

GT Pro Hub QUICKGUIDE

Hub安装自定义方向盘体示意图

Flatedgescrew M5-16 X6

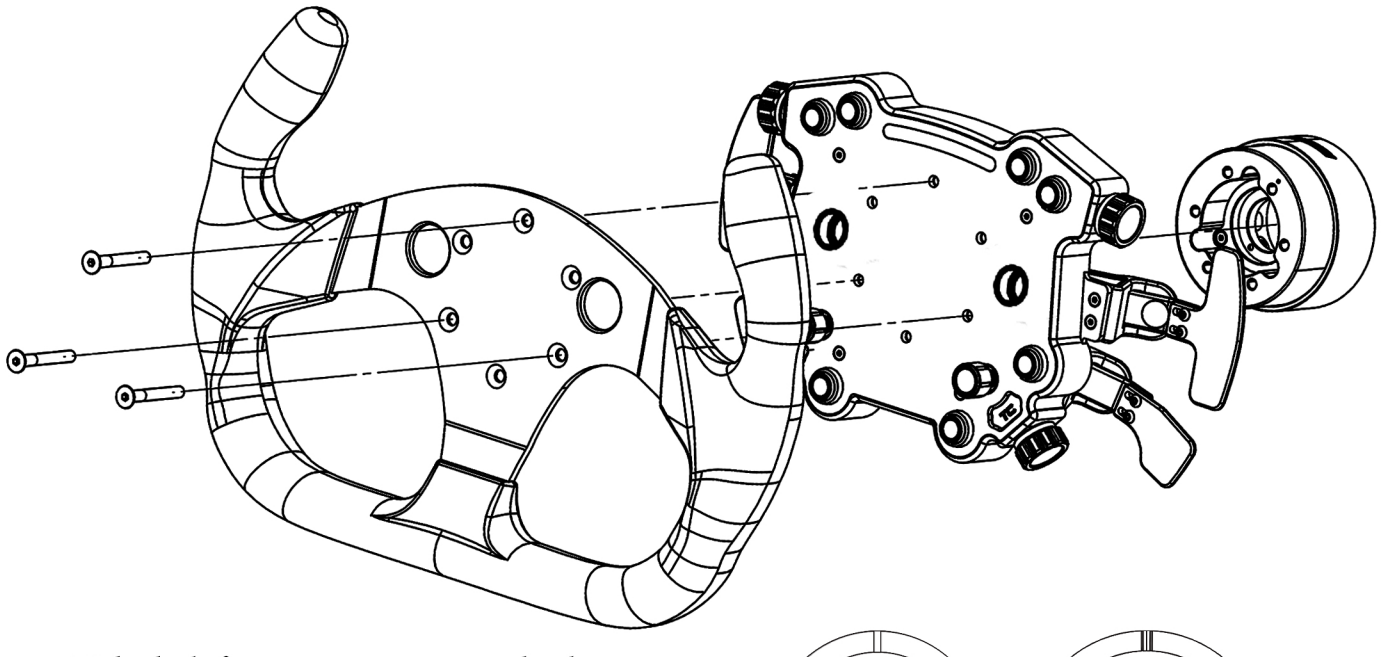

**The hub fits 320mm~350mm wheels

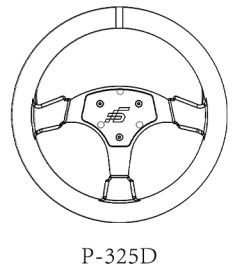

P-325D

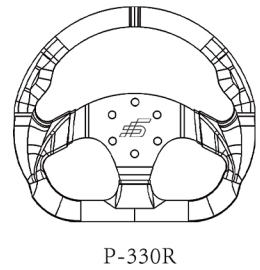

P-330R

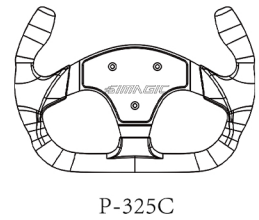

P-325C